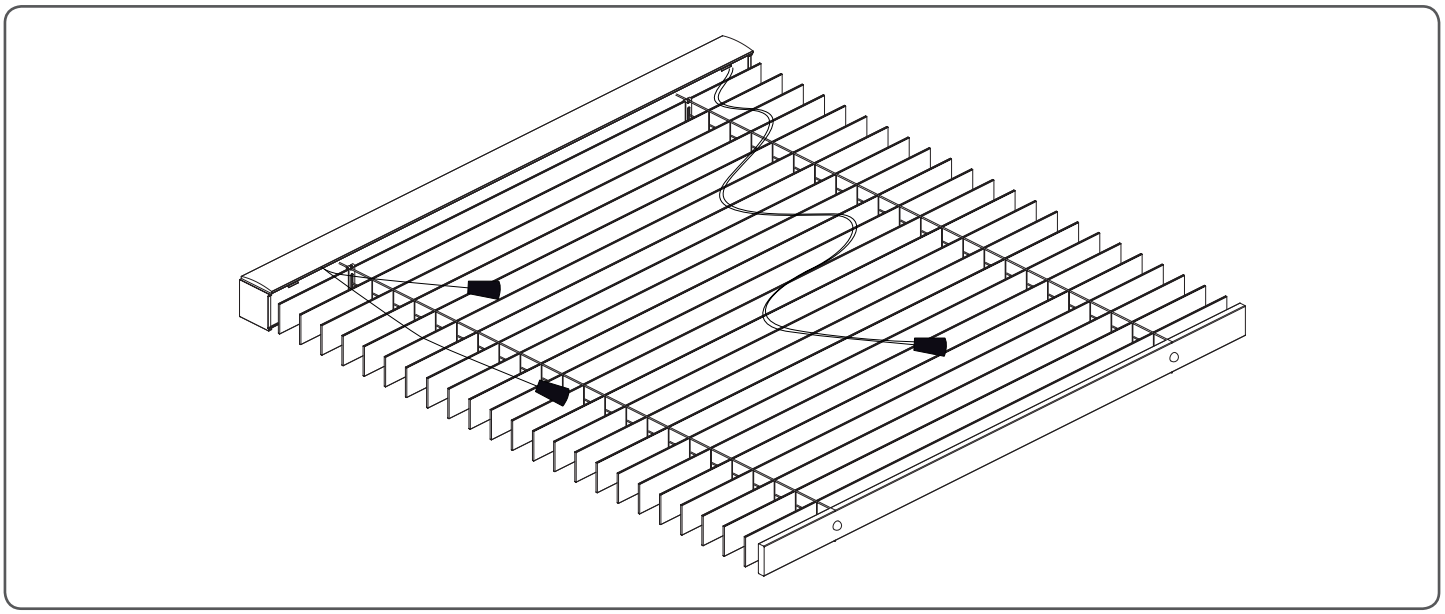

40 - 95 cm: 2 x
100 - 150 cm: 3 x
160 - 260 cm: 4 x
280 - 300 cm: 5 x

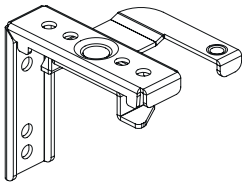

40 - 95 cm: 6 x
100 - 150 cm: 9 x
160 - 260 cm: 12 x
280 - 300 cm: 15 x

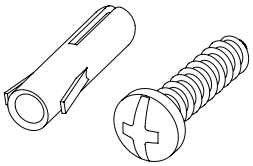

40 - 85 cm: 4 x
90 - 140 cm: 6 x
150 - 240 cm: 8 x
260 - 300 cm: 10 x

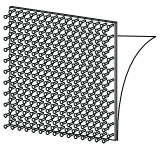

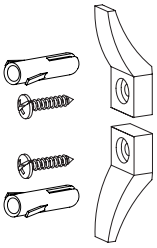

1 x

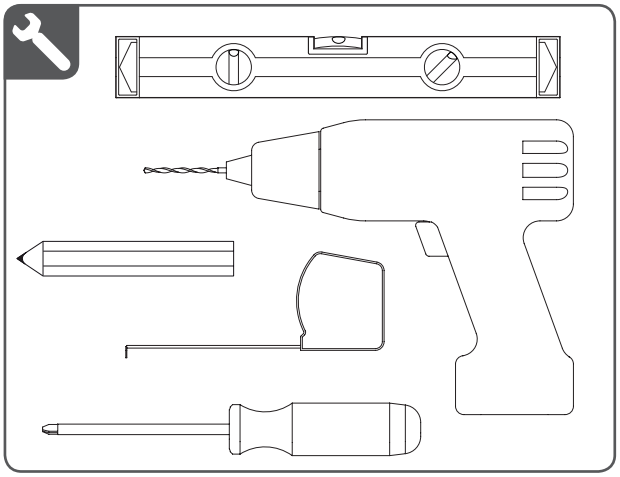

A

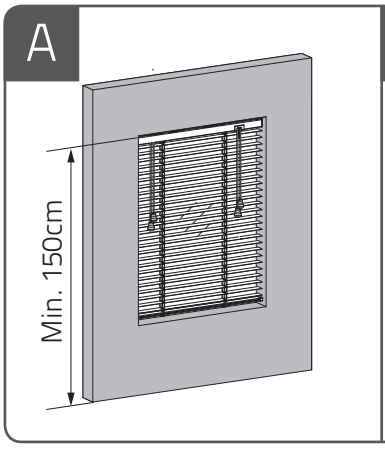

B

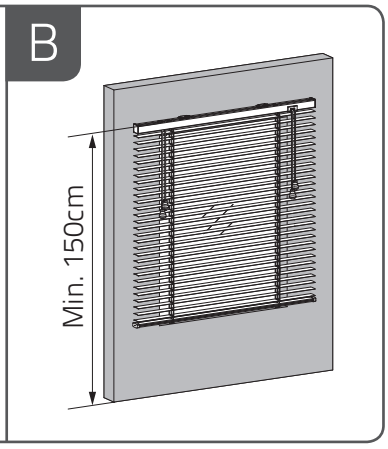

MN180092_20181219

© Copyright

1.2

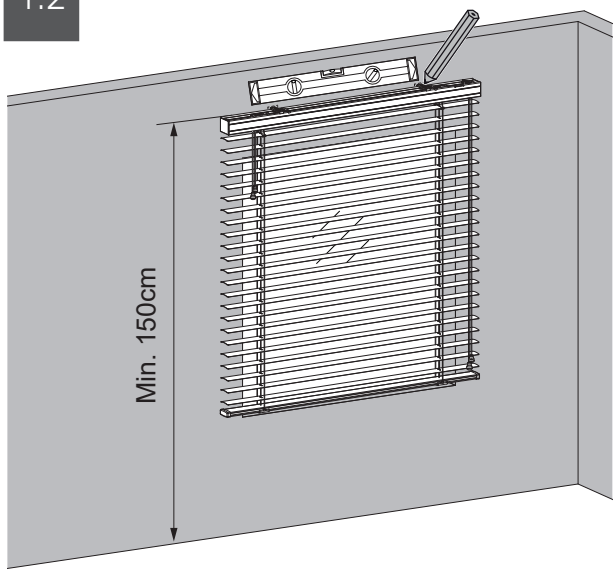

A

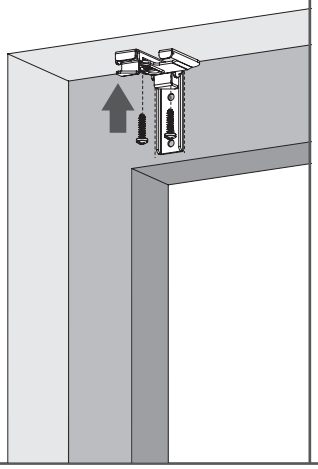

B

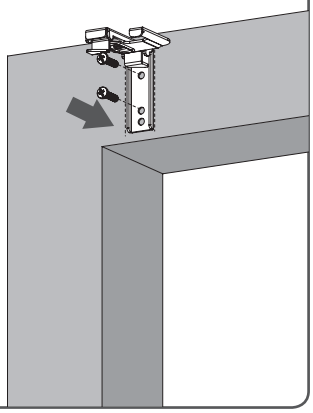

1.3

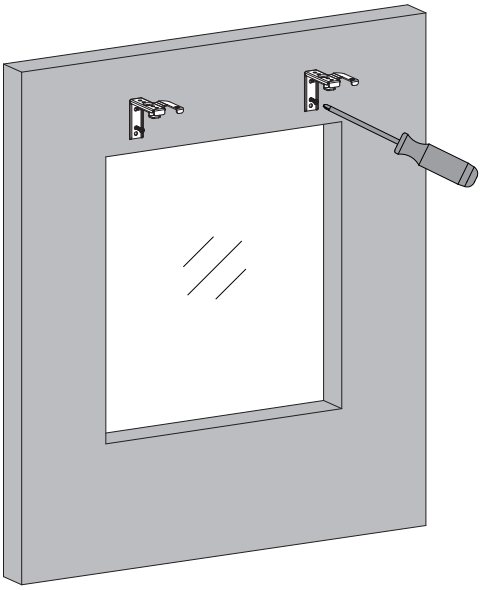

1.4

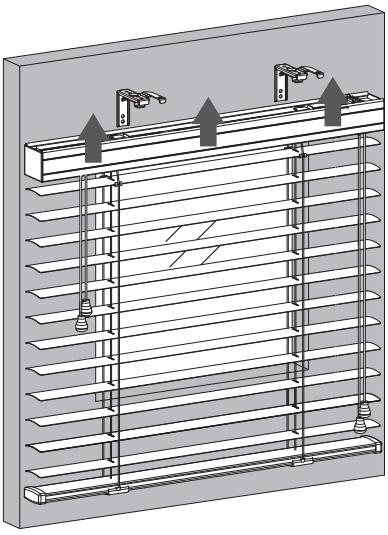

1.5

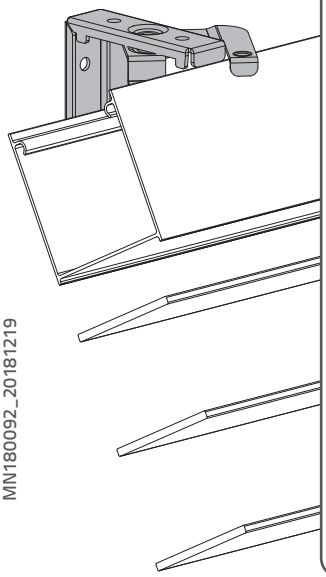

i

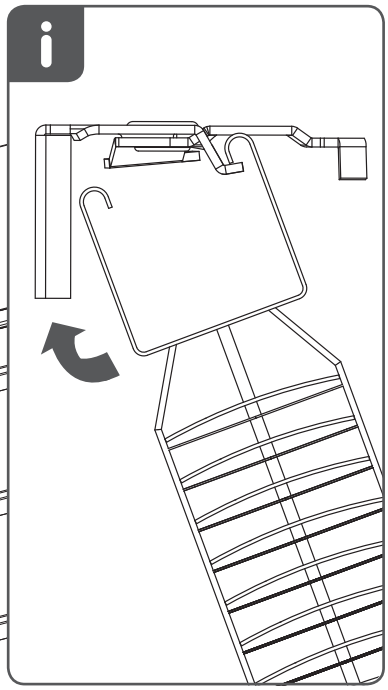

1.6

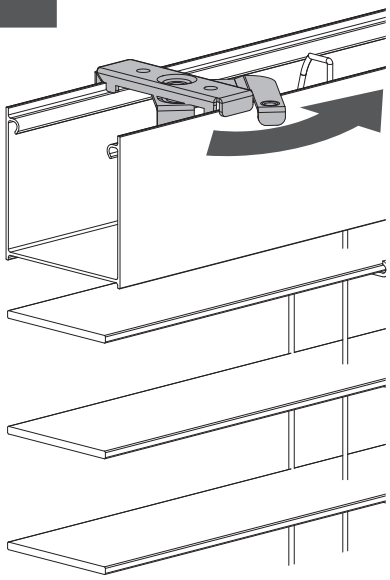

i

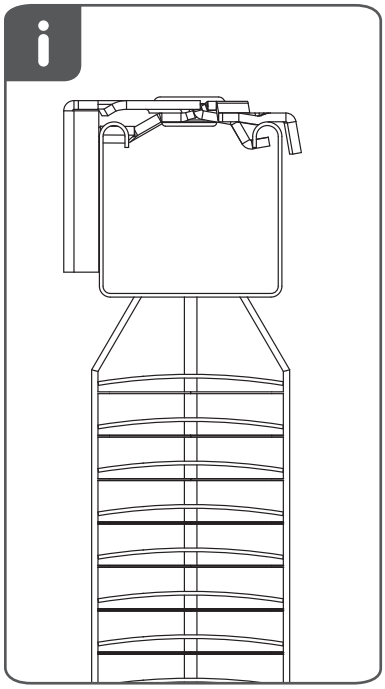

MN180092_20181219

© Copyright

1.7

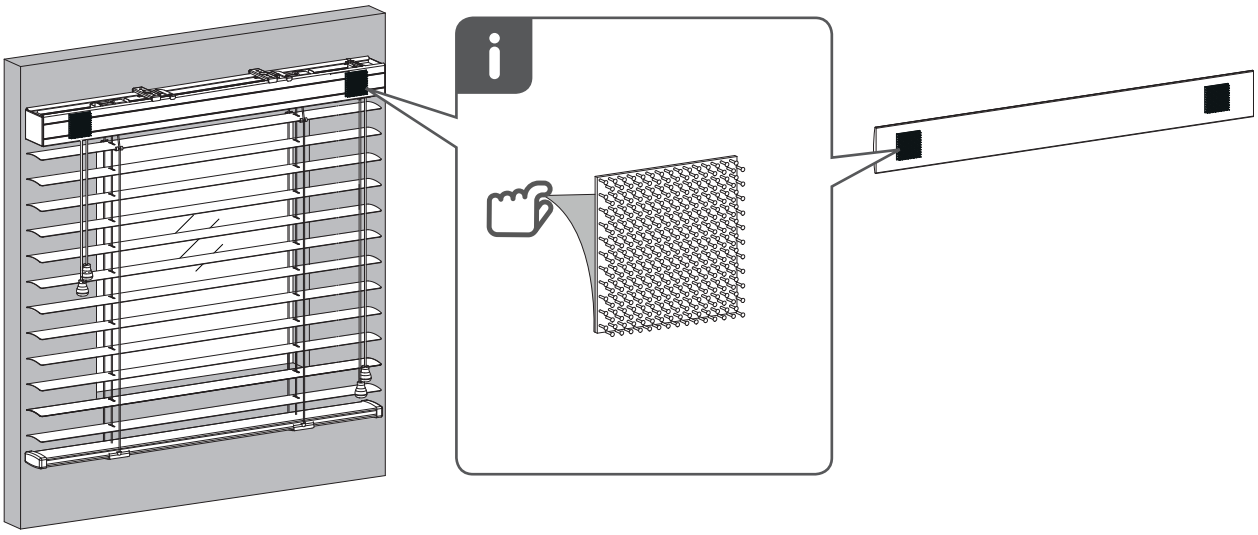

1.8

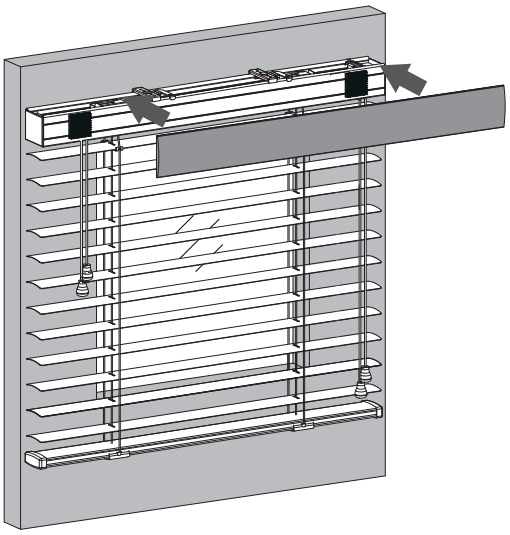

1.9

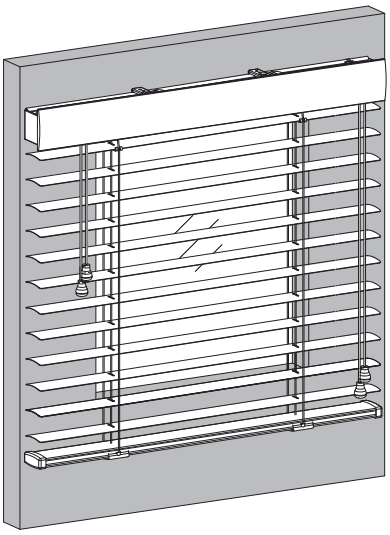

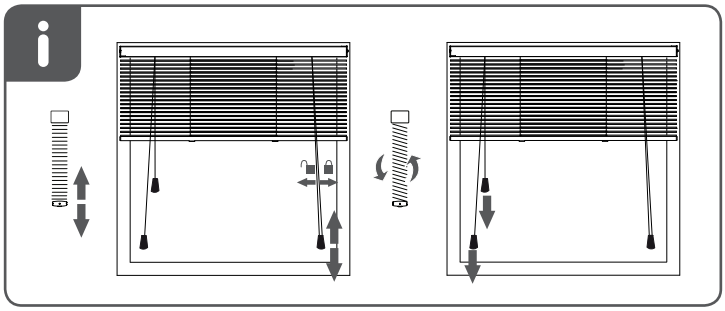

MN180092_20181219

© Copyright

2.1

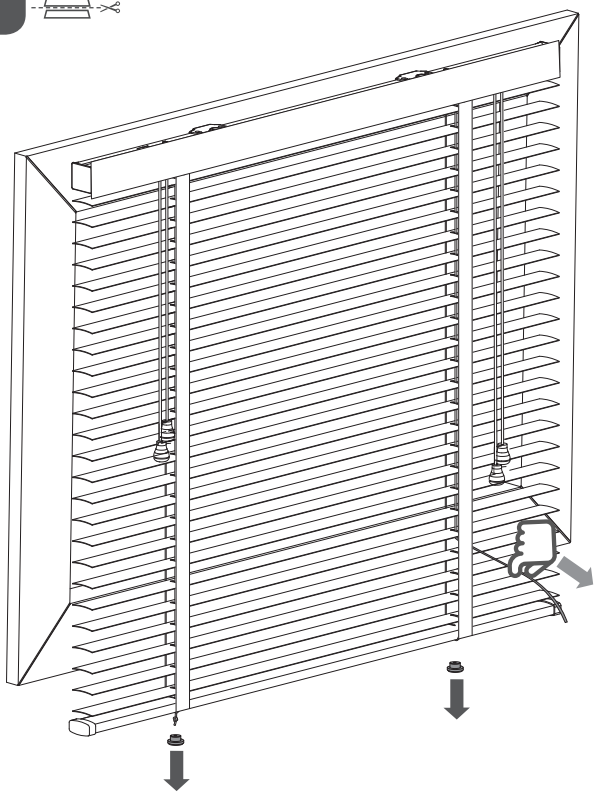

2.2

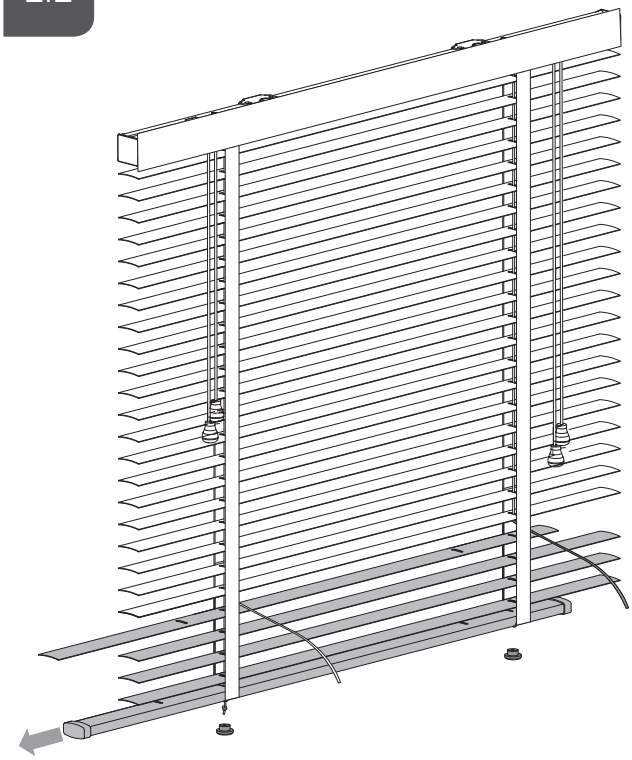

2.3

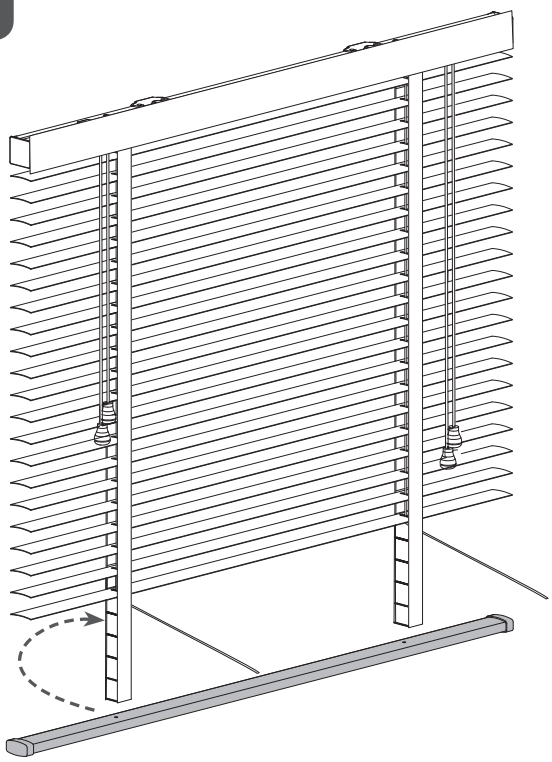

2.4

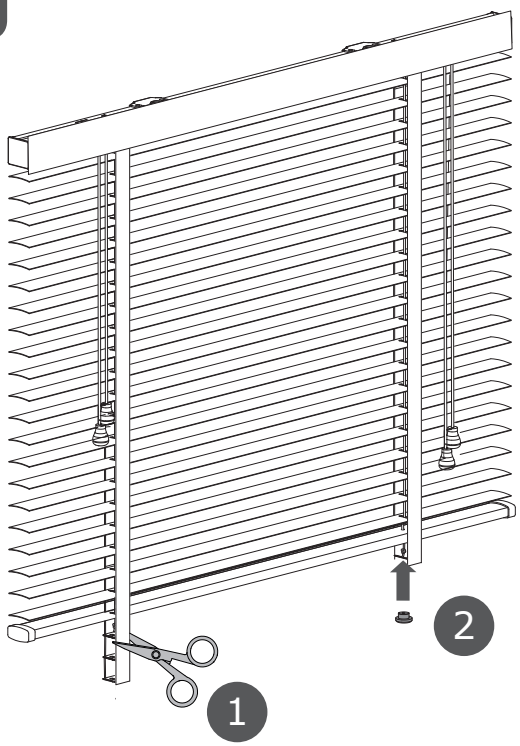

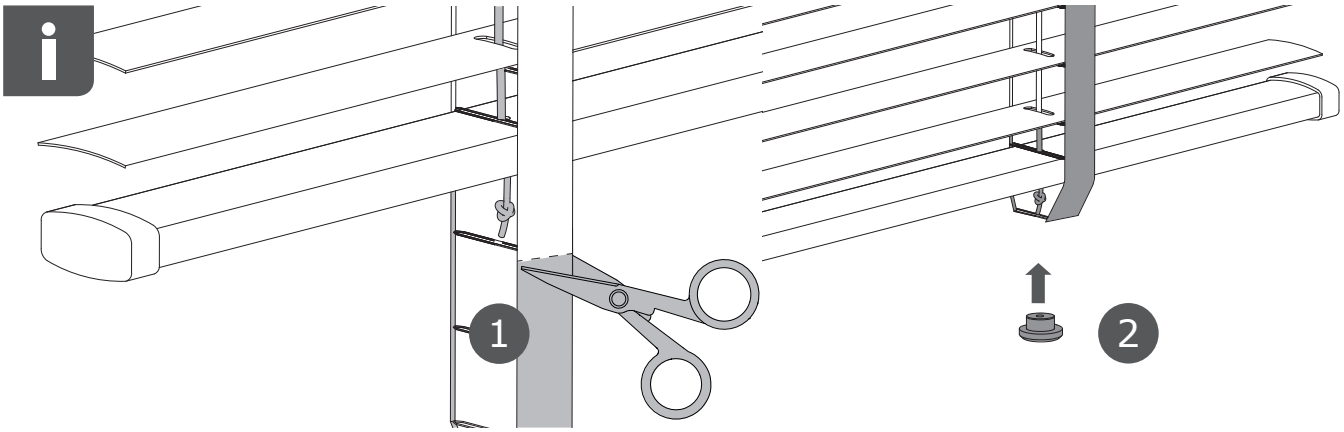

MN180092_20181219

© Copyright